API BASCO DEFAULTS (UNLESS OTHERWISE SPECIFIED)

ALL DIMENSIONS IN INCHES UNLESS DENOTED AS METRIC (mm)
1" = 1 INCH = 25.4mm
3rd ANGLE

TOLERANCES (unless specified) PER TEMA STANDARDS
ALL BOLT HOLES STRADDLE VERTICAL CENTERLINES.

This document contains proprietary information and may not be disclosed to others for any purpose or used for manufacturing purposes without written permission from API Heat Transfer.

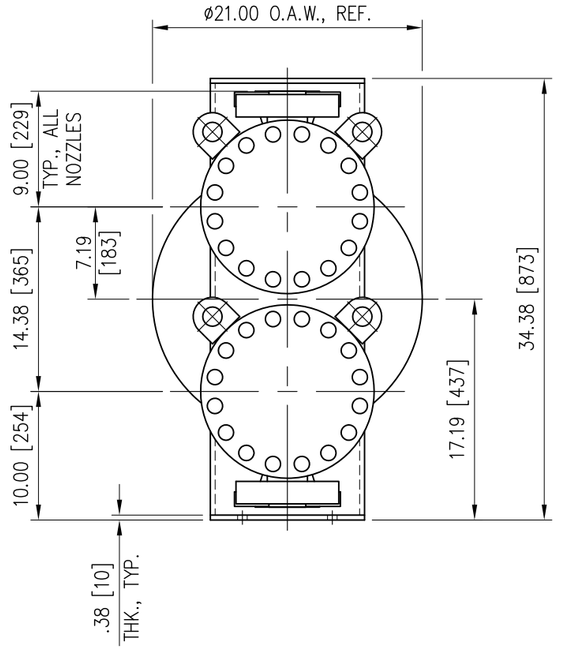

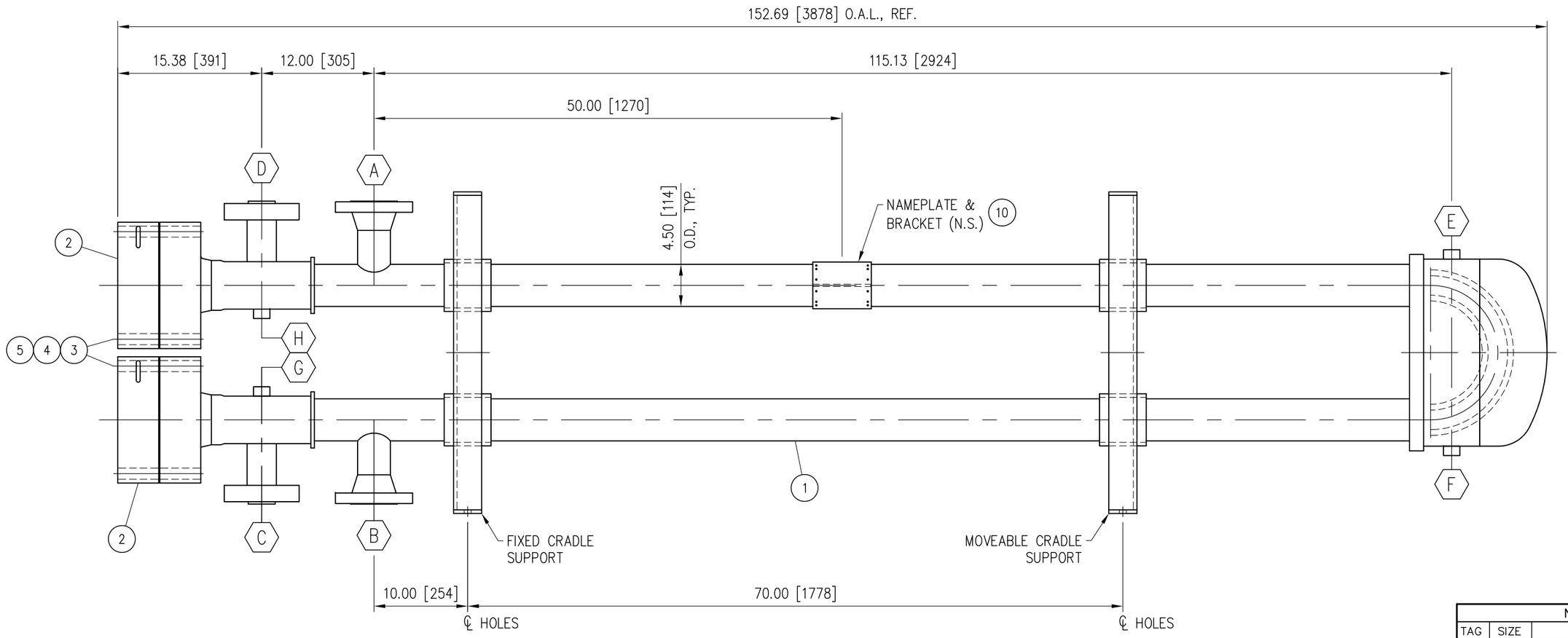

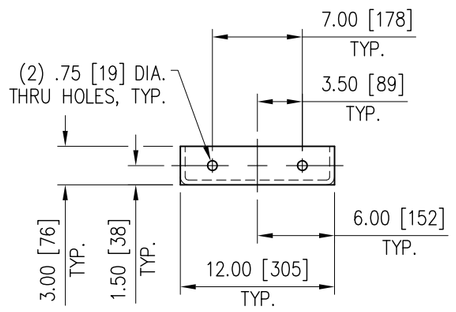

NOTES:
1.) QUANTITY: ONE (1) TOTAL
2.) EXTERNAL FINISH: SHELL SIDE: SANDBLAST PER SSPC-SP-6
PRIME COAT: KEM HI-TEMP 850 @ 1-1.5 MILS DFT. COLOR: LIGHT GRAY.
TOP COAT: KEM HI-TEMP 850 @ 1-1.5 MILS DFT. COLOR: STEEL GRAY
EXTERNAL FINISH: TUBE SIDE: ALUMINUM OXIDE BLAST
3.) INTERNAL FINISH: BLAST PER STD SHOP PRACTICE.
4.) ESTIMATED WEIGHTS:
EMPTY: 1840 LBS [835 KGS]
FLOODED: 2020 LBS [916 KGS]
COVER: 185 LBS [84 KGS]

Item	Qty	Description	Mat'l	Specification	Size	Dwg No	Part No
12	0	PAINT: KEM HI-TEMP 850 (STEEL GRAY)					4051-02-0199-02
11	0	PAINT: KEM HI-TEMP 850 (LIGHT GRAY)					4051-99-0299-04
10	1	NAMEPLATE		STN. STL.			4072-01-0106-01
9	2	SHIP COVER: 3"-300#		PLASTIC			4075-03-3012-00
8	2	SHIP COVER: 1 1/2"-2500#		PLASTIC			4075-15-2512-00
7	2	PIPE PLUG: 3/4" NPT		SA-105			4020-95-0309-00
6	2	PIPE PLUG: 3/4" NPT		SA-182 316			4020-95-0311-00
5	64	HEX NUT: 1"-8 UNC	ZINC PLTD	SA-194 2H			4026-43-0219-01
4	32	STUD: 1"-8 UNC x 11.50" LG	ZINC PLTD	SA-193 B7			4022-43-9219-00
3	2	CHANNEL COVER GASKET		316SS SPWND			4012-05-1115-20
2	2	CHANNEL COVER		SA-240 316	A	3018-05-909-000	3018-05-909-000
1	1	CORE ASSEMBLY		STEEL/STN. STL.	C	2070-04-132-001	2070-04-132-001

NOZZLE SCHEDULE			
TAG	SIZE	TYPE	SERVICE
A	3"	300# ANSI RFWN	SHELL SIDE INLET
B	3"	300# ANSI RFWN	SHELL SIDE OUTLET
C	1 1/2"	2500# ANSI RFLWN	TUBE SIDE INLET
D	1 1/2"	2500# ANSI RFLWN	TUBE SIDE OUTLET
E	3/4"	6000# NPT CPLG	SHELL SIDE VENT
F	3/4"	6000# NPT CPLG	SHELL SIDE DRAIN
G	3/4"	6000# NPT CPLG	TUBE SIDE VENT
H	3/4"	6000# NPT CPLG	TUBE SIDE DRAIN
J			
K			
L			
M			
N			

DESIGN DATA		
	SHELL SIDE	TUBE SIDE
DESIGN PRESSURE	110 PSIG / 7.6 Bar	3350 PSIG / 231.7 Bar
TEST PRESSURE	246 PSIG / 10.6 Bar	5311 PSIG / 331 Bar
DESIGN TEMP	-20/820°F -29/438°C	-20/690°F -29/366°C
CORR. ALLOWANCE	.125 [3]	NONE
RADIOGRAPHY	NONE	FULL PER CODE
PWHT	NONE	NONE
TUBE/TUBE SHEET JOINT = STRENGTH WELDED		

MATERIALS OF CONSTRUCTION		
PART	SHELL SIDE	TUBE SIDE
TUBES	SA-249 316	
TUBESHEETS	SA-240 316	
BAFFLE/FINS	STEEL	
HEADS	SA-516 70	SA-240 316
SHELL	SA-53 B	SA-182 F316
NOZZ FLGS	SA-105	SA-182 F316
CPLGS	SA-105	SA-182 F316
BOLTS/NUTS	SA-193 B7 / SA-194 2H ZINC PLATED	
GASKETS	316SS SPIRAL WOUND CGI	
O-RINGS		
BODY FLGS	SA-516 70	SA-182 F316

DIMENSIONS & DATA CERTIFIED FOR

CUST. ORDER: 008317 PATRIOT FUELS BIODIESEL, LLC
BASCO ORDER: E140279-501
BY: JCS DATE: 07/28/2014
CODES:
ASME VIII, Div. 1 2013 ED TEMA R

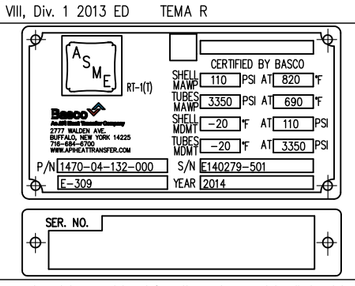

This document contains proprietary information and may not be disclosed to others for any purpose or used for manufacturing purposes without written permission from API Basco.

DRAWN 07/28/2014 BY: JCS	CHECK
SCALE 1:12	CONTRACT NO E140279-501

Basco
An API Heat Transfer Company

SUPER-1 HEATER
4 X 132 AW HAIRPIN

SIZE	DWG NO	REV
C	1470-04-132-000	0